MOVACOLOR

COLOR IN CONTROL

MC-Balance product information

Color in Control

Postal address
P.O. Box 3016 • 8600 DA Sneek
The Netherlands

Physical address
Koperslagersstraat 31 • 8601 WL Sneek
The Netherlands

Phone/Fax
Ph: +31 (0) 515 570020
Fax: +31 (0) 515 570021

E-mail/Internet
info@movacolor.com
www.movacolor.com

The dosing principle

Many applications for additives and colors require low and even more important: repeatable – dosage levels. Either the percentage to be added might be low, or the process just has a low throughput. Maintaining an accurate, steady and repeatable dosing rate at low dosages can be difficult. In some cases the process might dictate a low level of master batch, as in the case of tinted PET bottles where dosing rates as low as 0.05% are sometimes required.

Movacolor has developed a revolutionary dosing device that ensures a regular and repeatable output and also creates a wide range of application options, the Movacolor Dosing Cylinder®. From the outside it may look like a screw but, in fact, it is a cylinder. It ensures that colorant literally lines up granular by granular before it enters the main stream of material.

Particularly with low output, substantial savings on colorants are possible when a Dosing Cylinder® is used. See Fig. 1.

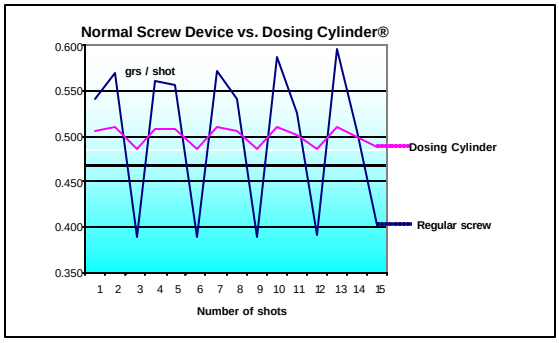

Fig 1. Actual dosing pattern of a normal screw-type dosing device versus a Dosing Cylinder®. Both tests were performed under identical circumstances, using the same material.

Fig. 1 compares the Movacolor Dosing Cylinder® to a screw. A screw-type dosing device will give an irregular output because of pulsations created by the screw itself, which causes the colorant to be dosed irregularly into the main material. A Dosing Cylinder® guarantees accurate dosing.

The Dosing Cylinder® works in combination with a stepper motor that ensures exact cylinder speed i.e. colorant dosing speed.

With a Dosing Cylinder® and stepper motor you achieve:

- An even dosing rate because peaks and drops associated with screw-type dosers are eliminated, depending on the material used, of course.
- Accurate and stable dosing because of the ability of the stepper motor to maintain a controllable speed within 0.1 rpm.
- Repeatability because of the stepper motor control.
- Versatility to run higher speeds for higher dosages.

Colorants are expensive. Savings on colorants are often substantial savings. With its outstanding control of the dosing process, the Movacolor Dosing Cylinder® does just that!

The Dosing Cylinder® and the stepper motor play a significant role in the dosing process. The neckpiece, on the other hand, is of great importance as well in terms of how the colorant reaches the main material. It is important that the regular output is not disturbed anywhere in the process, and dosed directly into the main stream.

Fig 2. Consistent metering allows the set point to be lowered. This will ensure substantially faster return on investment.

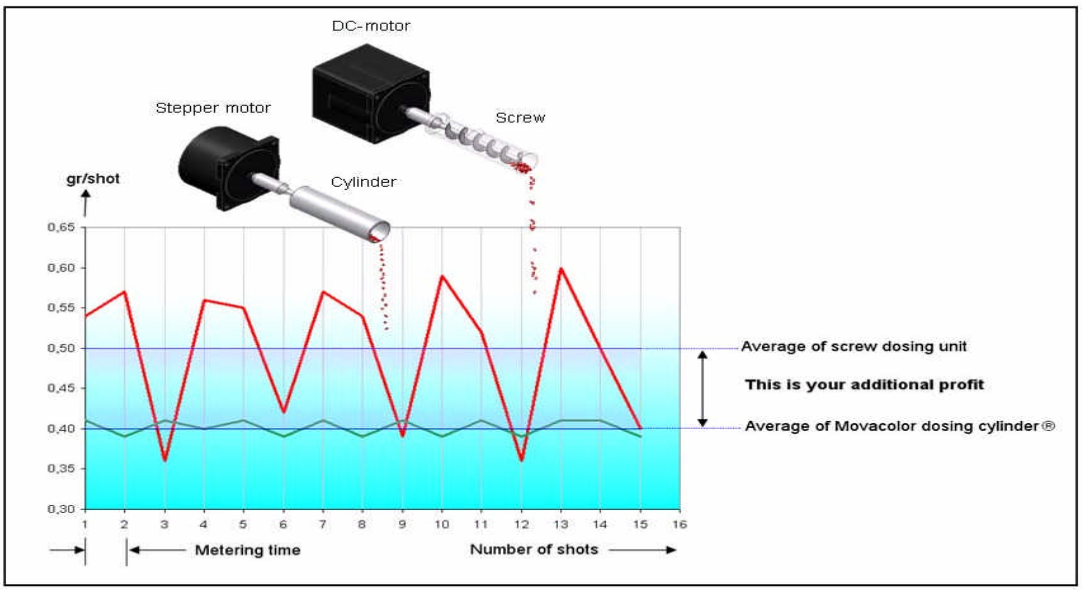

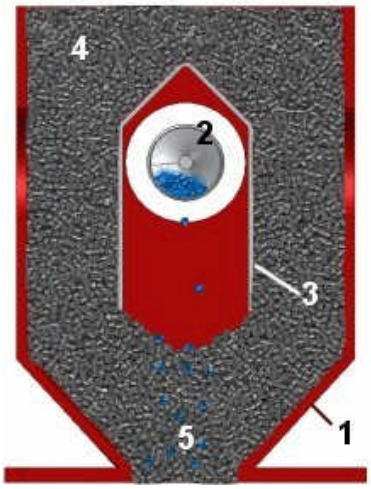

Fig. 3
1. Neckpiece 2. Dosing cylinder 3. Cover plate
4. Virgin material 5. To production machine

Standard neckpiece
During operation, the virgin material runs from the machine hopper through the neckpiece into the machine. Inside the neckpiece the virgin material flow is divided into two streams by the cover plate. In the space below the cover plate, the rotating cylinder is dosing additive.

Additive is added directly into the center of the virgin material flow, just before it enters the production machine. This is a great advantage over metering devices that use batch pre-mixing because pre-mixing can actually cause material separation. Separation of materials results in an irregular additive flow into the production machine.

PET neckpiece
PET enters the neckpiece through the inlet pipe. Any overpressure is relieved through the two air vents next to the PET inlet pipe. The pressure drop created in the volume around
the inlet pipe will allow any dust particles to settle before the air escapes through the air vents.
The PET stream is separated around the water-cooled insert with a no dead spots design so no material can settle. Mixing of the MB with the PET will take place directly under this insert. The inside of the PET neckpiece is self-cleaning which makes color changes substantially faster and easier.

Special neckpieces
Customer-specific neckpieces will be made on request. Movacolor has a wide range of mounting set-ups available in its CAD database.

MC-Balance + NST40 neckpiece + quick calibration slide

MC-30 + PET Neckpiece. Throughput of main material up to 750 kg/hr

MC-30 + PET neckpiece. Throughput of main material up to 2000 kg/hr

Gravimetric Single-Component series

The MC-Balance

The very user-friendly MC-Balance delivers accurate dosing rates on the basis of continuous loss-in-weight measurements with closed-loop control of the dosing speed. Color changes are quick and easy. The unit does not require time-consuming color calibration when materials are changed.

What the operator needs to do

Set color percentage, part weight, and time. Press the start button. That's all.

Operating the MC-Balance is as easy as it gets. It auto-calibrates and is permanently monitored by the weighing unit. If necessary, the MC-Balance will adjust the dosing unit rpm automatically.

How it works

The Movacolor MC-Balance® operates fully gravimetrically on the basis of the loss-in-weight principle. The dosing unit is permanently connected to a digital weighing unit with a quick-release connection. The weighing unit will always work accurately even under high-vibration conditions. The control unit has a self-regulating filter that ensures that weight information will be interpreted correctly by the control.

The MC-Balance operates on the basis of real loss-in-weight of the material to be dosed and cannot be influenced. What is out, is out. The MC-Balance also features a real-time memory in which, along with other data, the set amount in relation to the actually dosed amount can be read for a longer period of time.

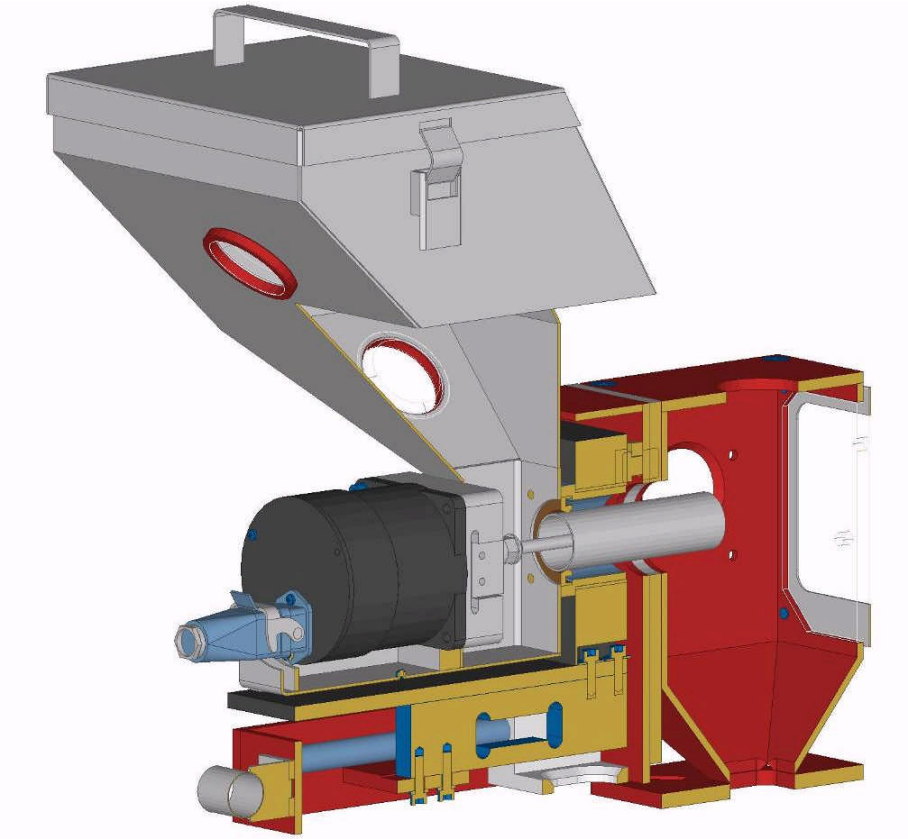

MC-Balance + optional quick exchangeable calibration slide

Movacolor MC -Balance

General

Simplicity and accuracy. These are the two keywords for the MC -Balance. The advanced, extremely user-friendly and menu-bar guided controls enable you to run the unit by simply setting the color percentage.

The MC-Balance can be used on injection molding machines, extruders, and blow molders. It always delivers accurate dosing rates through continues loss -in-weight measurements with closed-loop control of the dosing speed. Color changes are quick and easy. This unit eliminates time-consuming color calibration when materials are changed.

Calibration Method/Controls

The MC-Balance auto-calibrates continuously, eliminating the need to calibrate the unit when changing color.

MC-Balance + optional a quick exchangeable calibration slide

Controls

- Set and actual % setting for injection molding.
- Set and actual % setting for extrusion.
- Extrusion control.
- Relay or by tacho standard.
- Injection molding control:
    - Automatic metering time synchronization.
    - Or by manual timer.
    - Manual speed and time setting.
    - 4 keyboard lock levels.
    - Integrated hopper loader controller.

Memory modes

Production (data logger): up to 2 x 24 hours can be stored.

Production memory, up to 1500 machine settings can be stored.

Monitoring/System Information/
External Communication

128 x 64 full graphic LCD front display with integrated backlight

Man/machine interface: Using full language command structure; standard languages, English, German, French, Spanish, Italian, Portuguese, Turkish, and Swedish; other languages on request.

External communication: PC link using TCP/IP Internet protocol;
optional RS 232 or 485 available.

Alarm: 2 user-programmable alarm levels.

Output Ranges

Dosing system	Dosing capacity gram/sec	Dosing capacity Kg/hour
Type GL*	0.02 to 0.4	0.07 to 1.44
Type G*	0.2 to 7	0.72 to 25.2
Type A-20*	0.5 to 20	1.8 to 72
Type A-30**	2.0 to 50	7.2 to 180

Note* measured with granular masterbatch 0.8 kg/dm³

Note** only available with high torque (4 Amp) stepper motor

Specifications/Standards & Directives

Technical data:

Operating power from 80 VAC to 260 VAC, 50 and 60 Hz by integrated automatic voltage selector.

Power consumed 80 Watt maximum.

Stepper motor (1.8 degr/step) max 2 Amp or 4 Amp at 40 Volt.

Operating Temperature: -20 to + 70 degr. C.

Load cell electronics 20 bits A/D resolution with a full digital filtering.

Input signal(s):

Injection molding: Start/stop trigger input, potential free or 0 .. 24 VDC. Input for level sensor.

Extrusion: Start/stop trigger input, potential free or 0 .. 24 VDC. Tacho input, 0 .. 30 VDC Input for level sensor.

Output(s):

Stepper motor max output 2 Amp or 4 Amp (40 VDC)

- Solid State 24 VDC/0.5 A output, for valve hopper loader.
- Solid State 24 VDC/0.5 A output for external warning alarm.
- Relays for alarm level free programmable.
- Relays for alarm level free programmable.

All free programmable outputs are capable of driving up to 5 Amp 230 VAC/30 VDC.

Standards and Directives:

Protection class: IP-50.

According to CE standards:

EN50081-2 (HF radiation industry).

EN50082-2 (HF immunity industry).

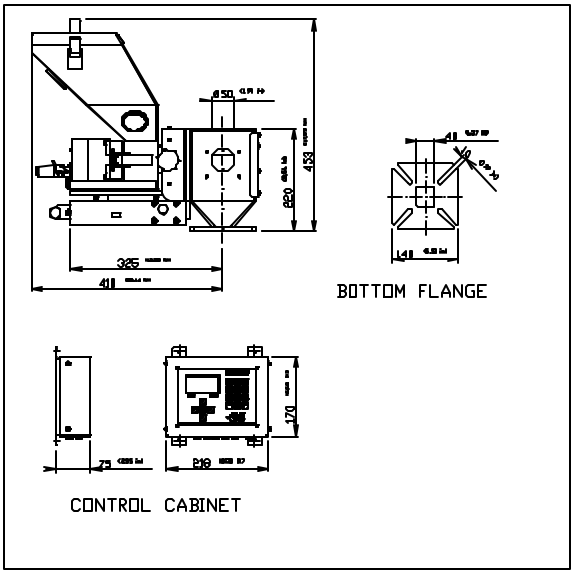

Safety

- In case of overload due to short-circuit or incorrect connection, the power supply automatically shuts down.
- Opto insulated start input for connection to production machine.

Machine connection flanges

Standard flange NST40 with cleaning opening and inlet/outlet Ø 50mm/ ? 40mm, steel epoxy coated.

Flange type NST90 with cleaning opening and inlet/outlet Ø 50mm/ ? 90mm, steel epoxy coated.

Water-cooled flange NBH(A) inlet/outlet 50 mm/50 mm, stainless steel ANSI 304.

Water-cooled flange NPHA inlet/outlet 100 mm/100 mm, stainless steel ANSI 304.

Other flange types custom-made on request.

Accessories

Hopper loader type ME, Hopper loader type MV, Mixers, Capacitive sensor, flash light(s), auto machine stop, etc.

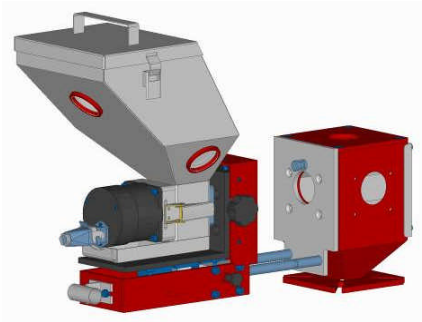

Easy pre-calibration slide

H2O PET neckpiece for throughput of main material< 2000 kg/hr

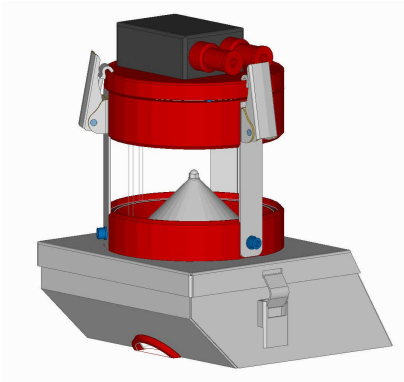

MV hopper loader